Electronics GLEAD 佳利电子
北 斗 星 通 旗 下 企 业

Product	DDM04A1732/2132L45C

Specification

ITEM	CH1	CH2
Center Frequency[fo]	1732.5MHz	2132.5MHz
Bandwidth[BW]	±22.5MHz	±22.5MHz
Insertion Loss in BW	2.5 dB max.	2.5 dB max.
Ripple in BW	1.0 dB max.	1.0 dB max.
VSWR in BW	1.4:1 max.	1.4:1 max.
Attenuation [Absolute Value]	50 min. @ 2110 to 2155 MHz	50 min. @ 1710 to 1755 MHz
In/Out Impedance	50Ω	
Input Power	3 w max.	
Operation Temperature	-40℃ ~ +85 ℃	

Dimension（mm）

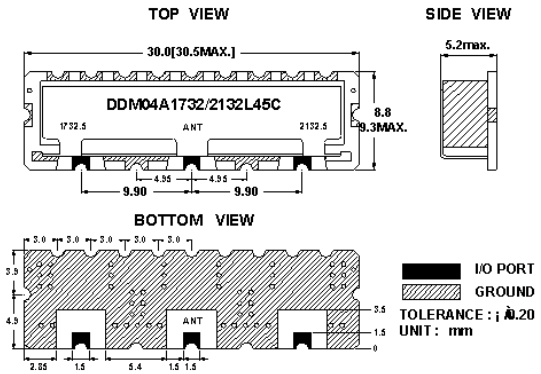

Product **DDM04A1732/2132L45C**
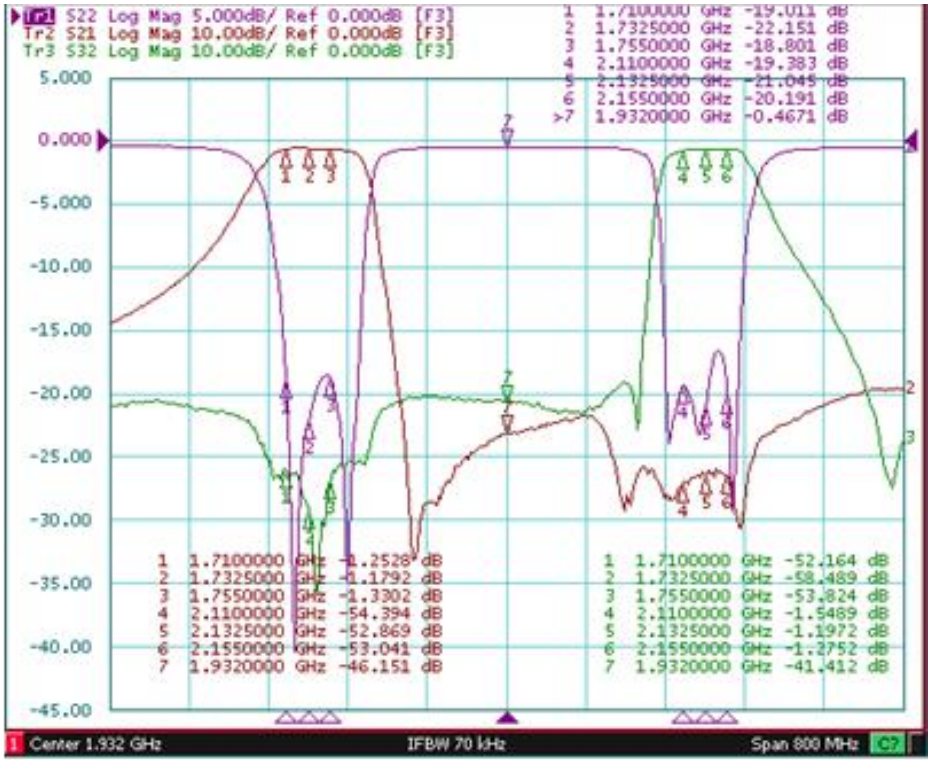
TEST GRAPH